ACCU ELECTRIC MOTORS INC

USA: (888) 932-9183 CANADA: (905) 829-2505

- Over 100 years cumulative experience
- 24 hour rush turnaround / technical support service
- Established in 1993

REGISTERED COMPANY ISO 9001: 2008

The leading independent repairer of servo motors and drives in North America.

Visit us on the web:

www.servo-repair.com

www.servorepair.ca

www.ferrocontrol.com

www.sandvikrepair.com

www.accuelectric.com

Scroll down to view your document!

For 24/7 repair services :

USA: 1 (888) 932 - 9183
Canada: 1 (905) 829 -2505

Emergency After hours: 1 (416) 624 0386

Servicing USA and Canada

Personal computer loader

The loader software for personal computers for the FALDIC-W Series can be downloaded from our website.

http://www.fujielectric.co.jp/fcs/

Menu screen

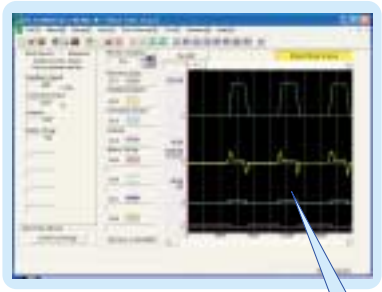

Real-time trace

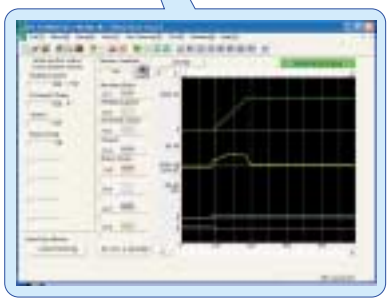

Historical trace

You can set the following with the personal computer loader:

(1) Real-time trace : Speeds and torque curves can be continuously obtained.
(2) Historical trace : Shorter, more detailed curves than real-time trace can be obtained.
(3) Monitor 2 : I/O can be checked and alarm history and the system configuration can be monitored.
(4) Parameter edit : Parameters can be edited, transferred, compared, and initialized.
(5) Communication setting : Set the conditions for communication between the servo amplifier and the personal computer.
(6) Easy tuning : The servomotor is automatically reciprocated with easy settings to adjust it to the auto tuning gain suitable for the machine system.
(7) Servo analysis : Inspects the resonance and antiresonance points of the machine system. The effect of the Notch Filter can also be checked.

Keypad

The keypad allows you to use the similar functions as with the personal computer loader.

*The keypad does not display trace but displays a value.

Mode change key
- Changes the mode (MODE).
- Cancels the mode (ESC).

Shift/Enter key
- Shifts the data setting digit to the right (SHIFT + MODE).
- Determines the mode or the value (ENT).

Sub-mode selection key (UP)
- Increases the value (+1).

Sub-mode selection key (DOWN)
- Decreases the value (-1).

Description of modes

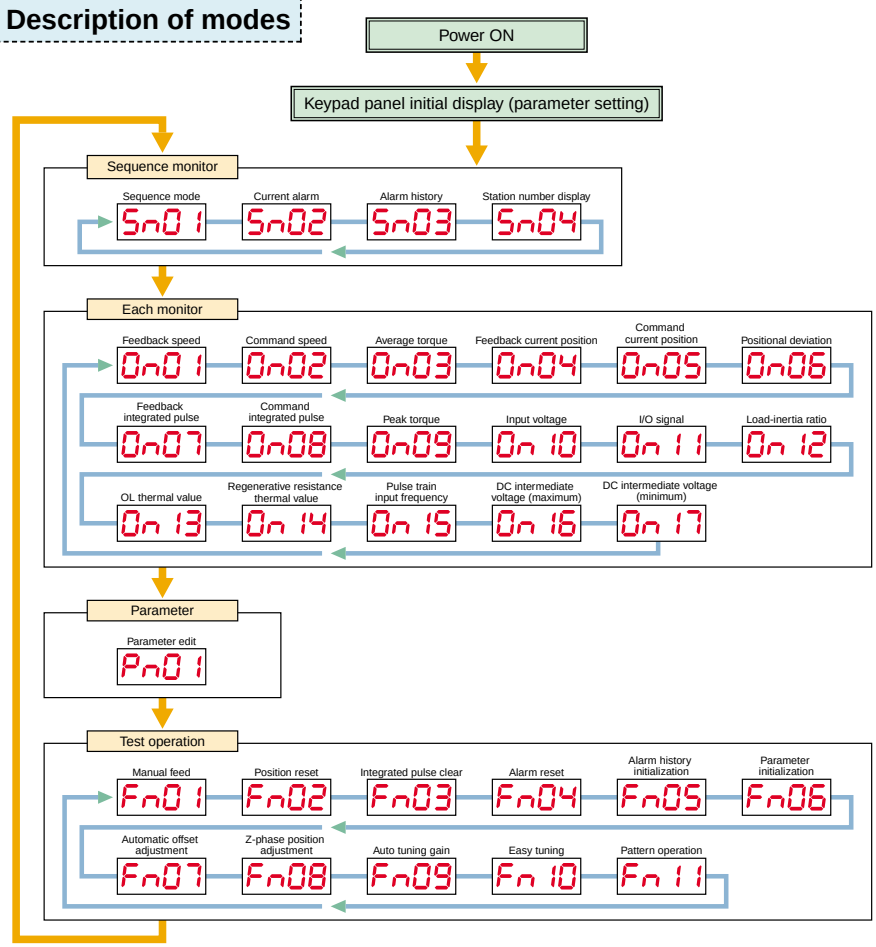

Explanation of Model Codes

Servo amplifier

RYC 500 D 3 – V V T 2

Code	[Basic type]
RYC	FALDIC-W Series

Code	[Applicable motor output]
500	50×10^{0}= 0.05 kW
101	10×10^{1}= 0.1 kW
201	20×10^{1}= 0.2 kW
401	40×10^{1}= 0.4 kW
501	50×10^{1}= 0.5 kW
751	75×10^{1}= 0.75 kW
851	85×10^{1}= 0.85 kW
102	10×10^{2}= 1 kW
132	13×10^{2}= 1.3 kW
152	15×10^{2}= 1.5 kW
202	20×10^{2}= 2 kW

Code	[Series]
D	3000 r/min
C	2000 r/min
B	1500 r/min

Code	[Order of development]

Code	[Input voltage]
2	AC 200 V series

Code	[Encoder]
T	17-bit INC

Code	[Upper interface]
V	DI/DO (speed)

Code	[Major functions]
V	Pulse train/speed control

Servomotor

GYS 500 D C 2 – T 2 A – B

Code	[Basic type]
GYS	Low inertia type
GYG	Middle inertia type

Code	[Rated output]
500	50×10^{0}= 0.05 kW
101	10×10^{1}= 0.1 kW
201	20×10^{1}= 0.2 kW
401	40×10^{1}= 0.4 kW
501	50×10^{1}= 0.5 kW
751	75×10^{1}= 0.75 kW
851	85×10^{1}= 0.85 kW
102	10×10^{2}= 1 kW
132	13×10^{2}= 1.3 kW
152	15×10^{2}= 1.5 kW
202	20×10^{2}= 2 kW

Code	[Rated speed]
D	3000 r/min series
C	2000 r/min series
B	1500 r/min series

Code	[Installation method]
C	Flange mounting

Code	[Order of development]

Code	[Brake]
Omitted	Not provided
B	Provided

Code	[Oil seal/ shaft]	Applicable motor	
		GYS	GYG
A	Without an oil seal, straight shaft with a key	◎	△
B	Without an oil seal, straight shaft without a key	△	△
E	With an oil seal, straight shaft with a key	△	◎
F	With an oil seal, straight shaft without a key	△	△

◎ : Standard item
△ : Made-to-order item

Code	[Input voltage]
2	AC 200 V series

Code	[Encoder]
T	17-bit INC

Guide to System Configuration

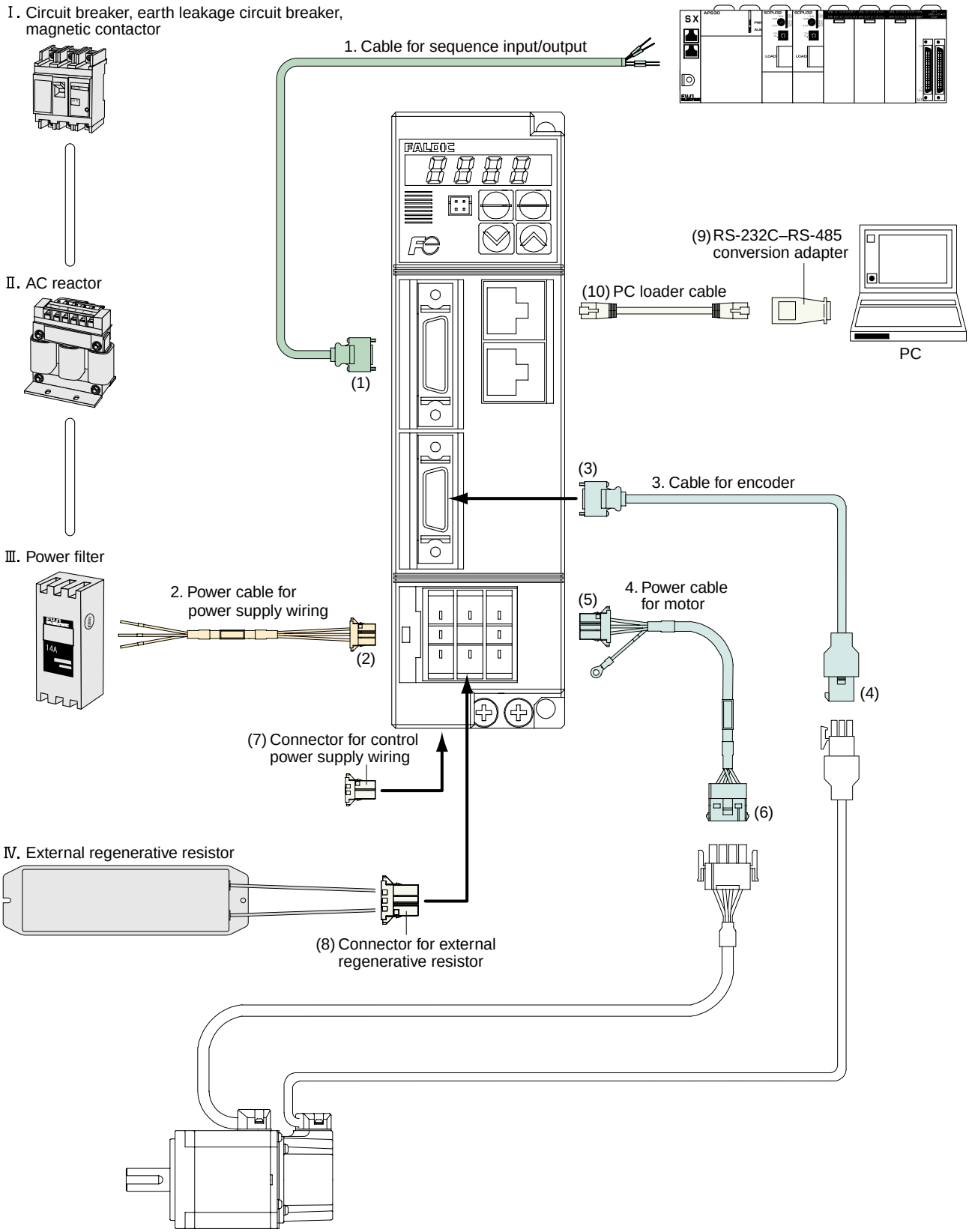

Guide to System Configuration

Connector-provided cable correspondence table

Motor series		Rated speed	Brake	Rated output	Between host and amplifier 1. Cable for sequence input/output	Between power supply and amplifier 2. Power cable for power supply wiring	Between amplifier and motor 3. Cable for encoder	4. Power cable for motor
Low inertia	GYS motor	3000 r/min	Not provided	0.05 to 0.75 kW	WSC-D26P03 (3 m)	WSC-S03P03-B (3 m)	WSC-P06P05-D (5 m) WSC-P06P10-D (10 m) WSC-P06P20-D (20 m)	WSC-M04P05-B (5 m) WSC-M04P10-B (10 m) WSC-M04P20-B (20 m)
			Provided	0.05 to 0.75 kW				WSC-M06P05-B (5 m) WSC-M06P10-B (10 m) WSC-M06P20-B (20 m)
Middle inertia	GYG motor	2000 r/min	Not provided	0.5 to 1 kW			WSC-P06P05-CD (5 m) WSC-P06P10-CD (10 m) WSC-P06P20-CD (20 m)	WSC-M04P05-WD (5 m) (*2) WSC-M04P10-WD (10 m) WSC-M04P20-WD (20 m)
				1.5 to 2 kW		*Terminal block wiring		– (*1)
			Provided	0.5 to 1 kW		WSC-S03P03-B (3 m)		WSC-M04P05-WD (5 m) (*3) WSC-M04P10-WD (10 m) WSC-M04P20-WD (20 m)
				1.5 to 2 kW		*Terminal block wiring		– (*1)
	GYG motor	1500 r/min	Not provided	0.5 to 0.85 kW		WSC-S03P03-B (3 m)		WSC-M04P05-WD (5 m) (*2) WSC-M04P10-WD (10 m) WSC-M04P20-WD (20 m)
				1.3 kW		*Terminal block wiring		– (*1)
			Provided	0.5 to 0.85 kW		WSC-S03P03-B (3 m)		WSC-M04P05-WD (5 m) (*3) WSC-M04P10-WD (10 m) WSC-M04P20-WD (20 m)
				1.3 kW		*Terminal block wiring		– (*1)

*1: The customer is requested to make this cable with a specified connector.
(Specified connector: WSK-M04P-CA for brakes without a brake; WSK-M06P-CA for motors with a brake)
*2: Use the cable together with the connector for motor power supply wiring WSK-M04P-CA.
*3: Use the cable together with the connector for motor power supply wiring WSK-M06P-CA. (The customer is requested to make a cable for brakes.)

Connector correspondence table

*When the customer makes a cable, use any of the connectors shown in this table.

Motor series		Rated speed	Brake	Rated output	Between host and amplifier (1) Connector for sequence input/output wiring	Between power supply and amplifier (2) Connector for power supply wiring	Between amplifier and motor Connector for encoder wiring (3) Amplifier side	(4) Motor side	Connector for motor power supply wiring (5) Amplifier side	(6) Motor side
Low inertia	GYS motor	3000 r/min	Not provided	0.05 to 0.75 kW	WSK-D26P	WSK-S03P-B	WSK-D20P	WSK-P09P-D	WSK-M03P-B	WSK-M04P
			Provided	0.05 to 0.75 kW						WSK-M06P
Middle inertia	GYG motor	2000 r/min	Not provided	0.5 to 1 kW				WSK-P06P-C		WSK-M04P-CA
				1.5 to 2 kW		*Terminal block wiring			*Terminal block wiring	
			Provided	0.5 to 1 kW		WSK-S03P-B			WSK-M03P-B	WSK-M06P-CA
				1.5 to 2 kW		*Terminal block wiring			*Terminal block wiring	
	GYG motor	1500 r/min	Not provided	0.5 to 0.85 kW		WSK-S03P-B			WSK-M03P-B	WSK-M04P-CA
				1.3 kW		*Terminal block wiring			*Terminal block wiring	
			Provided	0.5 to 0.85 kW		WSK-S03P-B			WSK-M03P-B	WSK-M06P-CA
				1.3 kW		*Terminal block wiring			*Terminal block wiring	

Common options

Name		Type	Description	Remarks
(7) Connector for control power supply wiring		WSK-L02P-D	–	(*4)
(8) Connector for external regenerative resistor		WSK-R03P-B	–	–
For personal computer loader connection	(9) Conversion adapter	NW0H-CNV	RS-232C–RS-485 conversion	A converter and a cable are required.
	(10) Cable	WSC-PCL	2 m	

*4: The 1.3 kW, 1.5 kW, and 2 kW amplifier do not require this connector because they are connected with a terminal block.

Peripheral devices

Rated speed	Input power supply	Servo amplifier type	Applicable motor output [kW]	I Circuit breaker	Earth leakage circuit breaker	Magnetic contactor	Surge absorber	II AC reactor	III Power filter	IV External regenerative resistor (*1)
3000 [r/min]	Single-phase 200 to 230 V	RYC500D3-VVT2	0.05	EA33AC/3	EG33C/5	SC-5-1(19A)	[For control relay] S1-B-0 Specification: 200 Ω(1/2W) +0.1 μF (Okaya Electric Industries) [For electromagnetic contactor] S2-A-0 Specification: 500 Ω(1/2W) +0.2 μF (Okaya Electric Industries)	ACR2-0.4A	FHF-TA/5/250	WSR-401
		RYC101D3-VVT2	0.1	EA33AC/5						
		RYC201D3-VVT2	0.2	EA33AC/10	EG33C/10			ACR2-0.75A	FHF-TA/10/250	
		RYC401D3-VVT2	0.4	EA53C/15	EG53C/15			ACR2-1.5A	FHF-TA/20/250	
		RYC751D3-VVT2	0.75					ACR2-2.2A		WSR-152
	3-phase 200 to 230 V	RYC751D3-VVT2	0.75					ACR2-1.5A		
2000 [r/min]	Single-phase 200 to 230 V	RYC501C3-VVT2	0.5	EA53C/15	EG53C/15			ACR2-1.5A	FHF-TA/20/250	WSR-152
		RYC751C3-VVT2	0.75					ACR2-2.2A		
	3-phase 200 to 230 V	RYC501C3-VVT2	0.5	EA33AC/10	EG33C/10			ACR2-0.75A	FHF-TA/10/250	
		RYC751C3-VVT2	0.75	EA53C/15	EG53C/15			ACR2-1.5A	FHF-TA/20/250	
		RYC102C3-VVT2	1.0					ACR2-2.2A		
		RYC152C3-VVT2	1.5							DB11-2
		RYC202C3-VVT2	2.0	EA53C/30	EG53C/30			ACR2-3.7A		
1500 [r/min]	Single-phase 200 to 230 V	RYC501B3-VVT2	0.5	EA53C/15	EG53C/15			ACR2-1.5A	FHF-TA/20/250	WSR-152
	3-phase 200 to 230 V	RYC501B3-VVT2	0.5	EA33AC/10	EG33C/10			ACR2-0.75A	FHF-TA/10/250	
		RYC851B3-VVT2	0.85	EA53C/15	EG53C/15			ACR2-1.5A	FHF-TA/20/250	
		RYC132B3-VVT2	1.3					ACR2-2.2A		DB11-2

*1: To connect the external regenerative resistor WSR-401 or WSR-152 to the amplifier, a connector for external regenerative resistors [type: WSK-R03P-B] is required.

Specifications [Servomotor]

Low inertia series (GYS motor) 3000 r/min

Standard specifications

Motor type	GYS500DC2 -T2□	GYS101DC2 -T2□	GYS201DC2 -T2□	GYS401DC2 -T2□	GYS751DC2 -T2□
Rated output [kW]	0.05	0.1	0.2	0.4	0.75
Rated torque [N·m]	0.159	0.318	0.637	1.27	2.39
Max. torque [N·m]	0.478	0.955	1.91	3.82	7.17
Rated speed [r/min]	3000				
Max. speed [r/min]	5000				
Moment of inertia [kg·m²]	0.0192×10^{-4}	0.0371×10^{-4}	0.135×10^{-4}	0.246×10^{-4}	0.853×10^{-4}
Rated current [A]	0.85	0.85	1.5	2.7	4.8
Max. current [A]	2.55	2.55	4.5	8.1	14.4
Winding insulation class	Class B				
Operation duty type	Continuous				
Degree of enclosure protection	Totally enclosed, self-cooled (IP67, excluding the shaft sealing and connectors)				
Terminals (motor)	With 0.3 m flexible leads and connectors				
Terminals (encoder)	With 0.3 m flexible leads and connectors				
Overheat protection	Not provided (The servo amplifier detects temperature.)				
Mounting method	By securing motor flange IMB5 (L51), IMV1 (L52), IMV3 (L53)				
Shaft extension	Straight shaft with a key				
Paint color	N1.5				
Encoder	17-bit encoder				
Vibration level	V5 or below				
Installation place, altitude	For indoor use, 1000 m or below				
Ambient temperature, humidity	-10 to +40 °C, 90 % RH or below (without condensation)				
Vibration resistance [m/s²]	49				
Mass [kg]	0.45	0.55	1.2	1.8	3.4

Motor with a brake

Motor type	GYS500DC2 -T2□-B	GYS101DC2 -T2□-B	GYS201DC2 -T2□-B	GYS401DC2 -T2□-B	GYS751DC2 -T2□-B
Rated output [kW]	0.05	0.1	0.2	0.4	0.75
Rated torque [N·m]	0.159	0.318	0.637	1.27	2.39
Static friction torque [N·m]	0.34		1.27		2.45
Moment of inertia [kg·m²]	0.0223×10^{-4}	0.0402×10^{-4}	0.335×10^{-4}	0.446×10^{-4}	1.203×10^{-4}
Rated DC voltage [V]	24 V DC				
Attraction time [ms]	35		40		60
Release time [ms]	10		20		25
Brake input [W]	6.1		7.3		8.5
Mass [kg]	0.6	0.7	1.7	2.3	4.2

Torque characteristic diagrams (3000 r/min)

GYS500DC2-T2□	GYS101DC2-T2□	GYS201DC2-T2□	GYS401DC2-T2□	GYS751DC2-T2□
0.05 kW	0.1 kW	0.2 kW	0.4 kW	0.75 kW

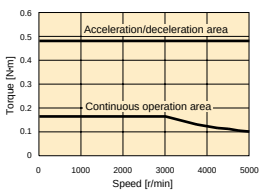

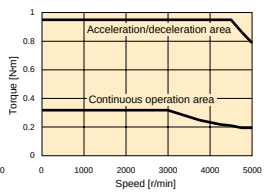

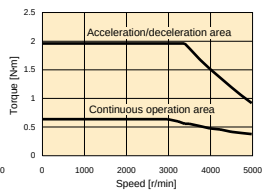

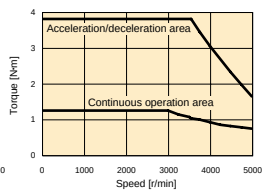

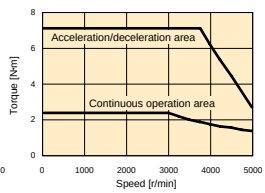

Specifications [Servomotor]

Middle inertia series (GYG motor) 2000 r/min, 1500 r/min

Standard specifications

Motor type	GYG501CC2 -T2□	GYG751CC2 -T2□	GYG102CC2 -T2□	GYG152CC2 -T2□	GYG202CC2 -T2□	GYG501BC2 -T2□	GYG851BC2 -T2□	GYG132BC2 -T2□
Rated output [kW]	0.5	0.75	1.0	1.5	2.0	0.5	0.85	1.3
Rated torque [N·m]	2.39	3.58	4.77	7.16	9.55	3.18	5.41	8.28
Max. torque [N·m]	7.2	10.7	14.3	21.5	28.6	9.50	16.2	24.8
Rated speed [r/min]	2000					1500		
Max. speed [r/min]	3000							
Moment of inertia [kg·m²]	7.96×10^{-4}	11.55×10^{-4}	15.14×10^{-4}	22.33×10^{-4}	29.51×10^{-4}	11.55×10^{-4}	15.15×10^{-4}	22.33×10^{-4}
Rated current [A]	3.5	5.2	6.4	10.0	12.3	4.7	7.3	11.5
Max. current [A]	10.5	15.6	19.2	30.0	36.9	14.1	21.9	34.5
Winding insulation class	Class F							
Operation duty type	Continuous							
Degree of enclosure protection	Totally enclosed, self-cooled (IP67, excluding the shaft sealing)							
Terminals (motor)	Cannon connectors							
Terminals (encoder)	Cannon connectors							
Overheat protection	Not provided (The servo amplifier detects temperature.)							
Mounting method	By securing motor flange IMB5 (L51), IMV1 (L52), IMV3 (L53)							
Shaft extension	Straight shaft with a key							
Paint color	N1.5							
Encoder	17-bit encoder							
Vibration level	V10 or below							
Installation place, altitude	For indoor use, 1000 m or below							
Ambient temperature, humidity	-10 to +40 °C, 90 % RH or below (without condensation)							
Vibration resistance [m/s²]	24.5							
Mass [kg]	5.3	6.4	7.5	9.8	12.0	6.4	7.5	9.8

Motor with a brake

Motor type	GYG501CC2 -T2□-B	GYG751CC2 -T2□-B	GYG102CC2 -T2□-B	GYG152CC2 -T2□-B	GYG202CC2 -T2□-B	GYG501BC2 -T2□-B	GYG851BC2 -T2□-B	GYG132BC2 -T2□-B
Rated output [kW]	0.5	0.75	1.0	1.5	2.0	0.5	0.85	1.3
Rated torque [N·m]	2.39	3.58	4.77	7.16	9.55	3.18	5.41	8.28
Static friction torque [N·m]	17							
Moment of inertia [kg·m²]	10×10^{-4}	13.6×10^{-4}	17.2×10^{-4}	24.4×10^{-4}	31.6×10^{-4}	13.6×10^{-4}	17.3×10^{-4}	24.5×10^{-4}
Rated DC voltage [V]	24 V DC ± 10 %							
Attraction time [ms]	120							
Release time [ms]	30							
Brake input [W]	14 (at 20 °C)							
Mass [kg]	8.3	9.4	10.5	12.8	15.0	9.4	10.5	12.8

Torque characteristic diagrams (2000 r/min)

GYG501CC2-T2□	GYG751CC2-T2□	GYG102CC2-T2□	GYG152CC2-T2□	GYG202CC2-T2□
0.5 kW	0.75 kW	1.0 kW	1.5 kW	2.0 kW

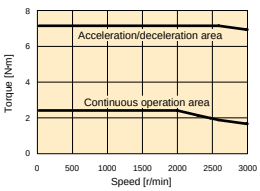

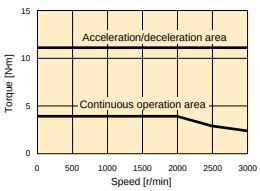

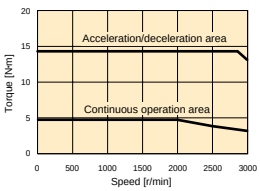

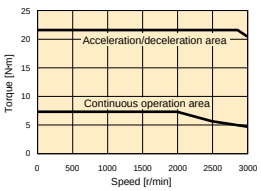

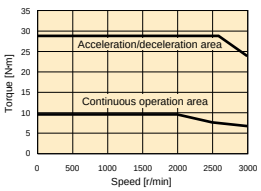

Torque characteristic diagrams (1500 r/min)

GYG501BC2-T2□	GYG851BC2-T2□	GYG132BC2-T2□
0.5 kW	0.85 kW	1.3 kW

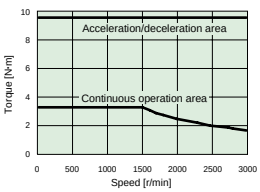

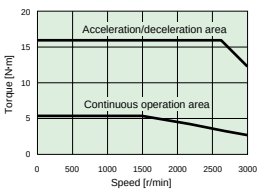

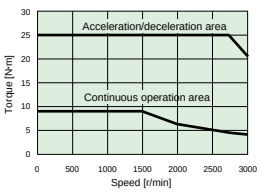

External Dimensions [Servomotor]

Low inertia series (GYS motor) 3000 r/min

■ Standard type

Rated speed	Rated output	Type	Shaft end shape	Overall length	Dimension (flange)	Mass [kg]
				L	LL	
3000 [r/min]	0.05 kW	GYS500DC2-T2A	Fig. A	103	78	0.45
	0.1 kW	GYS101DC2-T2A	Fig. B	121	96	0.55

(Unit: mm)

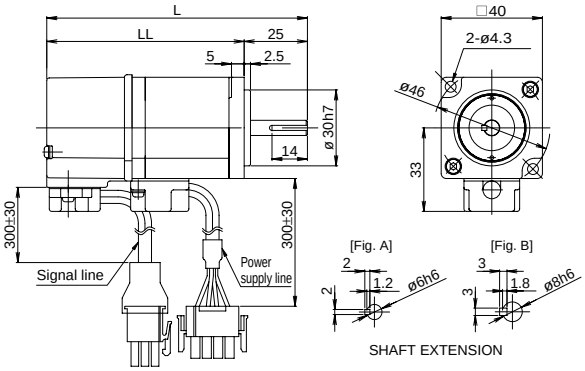

■ Motor with a brake

Rated speed	Rated output	Type	Shaft end shape	Overall length	Dimension (flange)	Mass [kg]
				L	LL	
3000 [r/min]	0.05 kW	GYS500DC2-T2A-B	Fig. A	137.5	112.5	0.62
	0.1 kW	GYS101DC2-T2A-B	Fig. B	155.5	130.5	0.72

(Unit: mm)

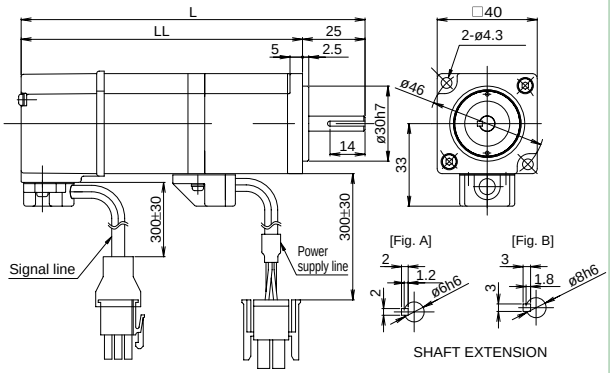

Rated speed	Rated output	Type	Overall length	Dimension (flange)	Mass [kg]
			L	LL	
3000 [r/min]	0.2 kW	GYS201DC2-T2A	126.5	96.5	1.2
	0.4 kW	GYS401DC2-T2A	154.5	124.5	1.8

(Unit: mm)

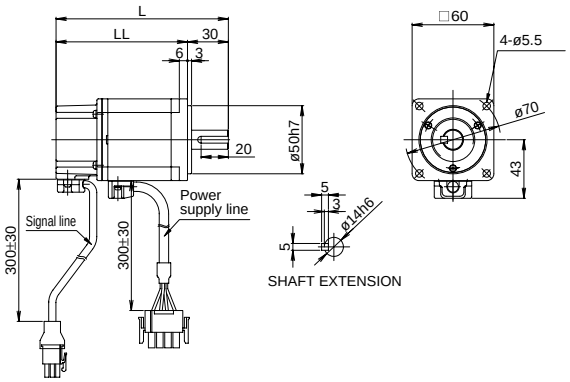

Rated speed	Rated output	Type	Overall length	Dimension (flange)	Mass [kg]
			L	LL	
3000 [r/min]	0.2 kW	GYS201DC2-T2A-B	164.5	134.5	1.7
	0.4 kW	GYS401DC2-T2A-B	192.5	162.5	2.3

(Unit: mm)

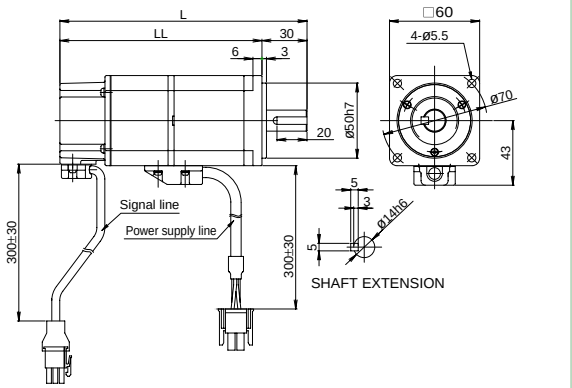

Rated speed	Rated output	Type
3000 [r/min]	0.75 kW	GYS751DC2-T2A

(Unit: mm)

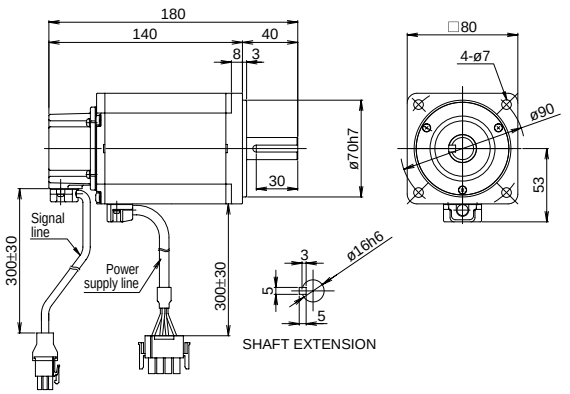

Mass: 3.4 [kg]

Rated speed	Rated output	Type
3000 [r/min]	0.75 kW	GYS751DC2-T2A-B

(Unit: mm)

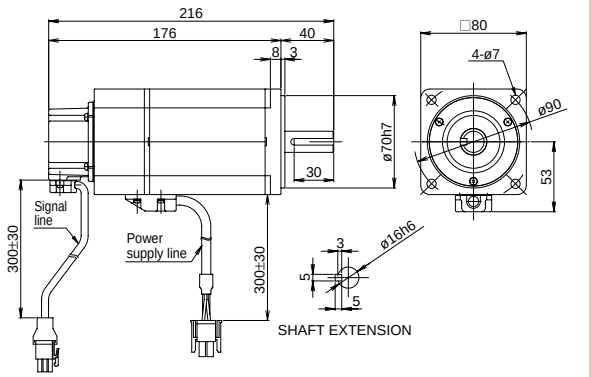

Mass: 4.2 [kg]

External Dimensions [Servomotor]

Middle inertia series (GYG motor) 2000 r/min, 1500 r/min

■ Standard type

Rated speed	Rated output	Type	Overall length	Dimension (flange)	Terminal	Mass [kg]
			L	LL	KB1	
2000 [r/min]	0.5 kW	GYG501CC2-T2E	175	120	47.5	5.3
	0.75 kW	GYG751CC2-T2E	187.5	132.5	60	6.4

(Unit: mm)

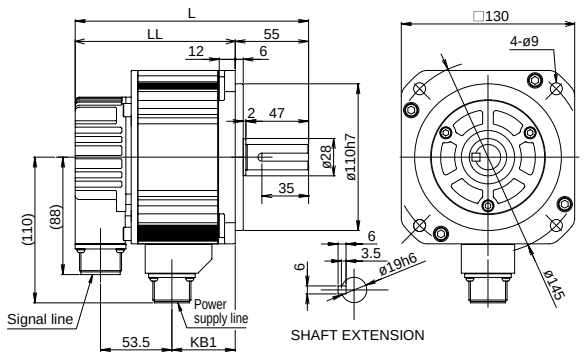

Rated speed	Rated output	Type	Overall length	Dimension (flange)	Terminal	Mass [kg]
			L	LL	KB1	
2000 [r/min]	1 kW	GYG102CC2-T2E	200	145	72.5	7.5
	1.5 kW	GYG152CC2-T2E	225	170	97.5	9.8
	2 kW	GYG202CC2-T2E	250	195	122.5	12

(Unit: mm)

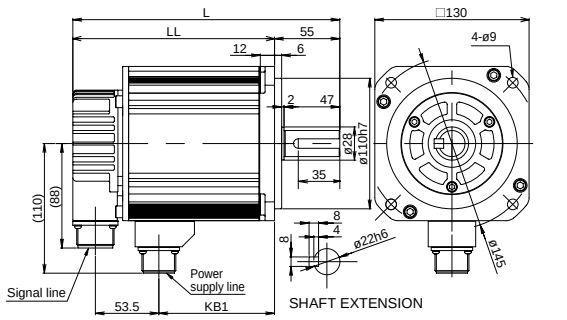

Rated speed	Rated output	Type	Shaft end shape	Overall length	Dimension (flange)	Terminal	Mass [kg]
				L	LL	KB1	
1500 [r/min]	0.5 kW	GYG501BC2-T2E	Fig. A	190.5	132.5	60	6.4
	0.85 kW	GYG851BC2-T2E	Fig. A	203	145	72.5	7.5
	1.3 kW	GYG132BC2-T2E	Fig. B	228	170	97.5	9.8

(Unit: mm)

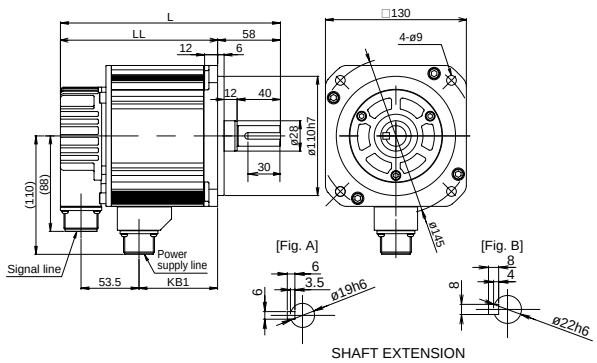

■ Motor with a brake

Rated speed	Rated output	Type	Overall length	Dimension (flange)	Terminal	Mass [kg]
			L	LL	KB1	
2000 [r/min]	0.5 kW	GYG501CC2-T2E-B	217.5	162.5	52	7.5
	0.75 kW	GYG751CC2-T2E-B	230	175	64.5	8.6

(Unit: mm)

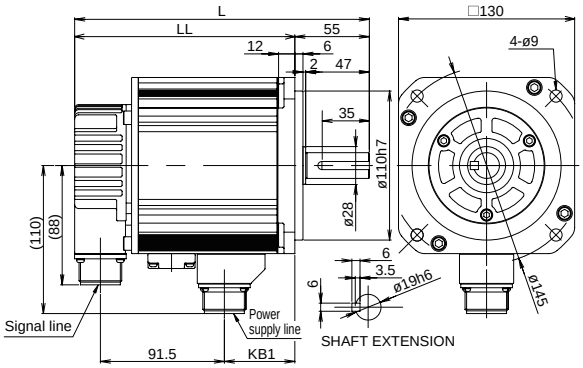

Rated speed	Rated output	Type	Overall length	Dimension (flange)	Terminal	Mass [kg]
			L	LL	KB1	
2000 [r/min]	1 kW	GYG102CC2-T2E-B	242.5	187.5	77	9.7
	1.5 kW	GYG152CC2-T2E-B	267.5	212.5	102	12
	2 kW	GYG202CC2-T2E-B	292.5	237.5	127	14.2

(Unit: mm)

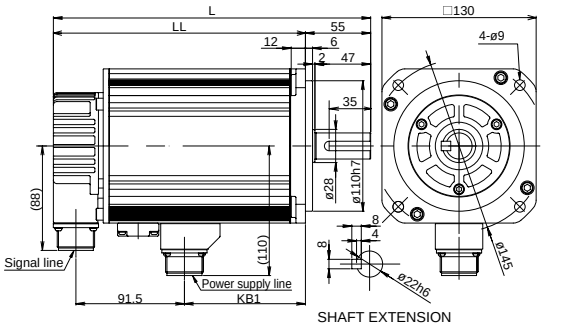

Rated speed	Rated output	Type	Shaft end shape	Overall length	Dimension (flange)	Terminal	Mass [kg]
				L	LL	KB1	
1500 [r/min]	0.5 kW	GYG501BC2-T2E-B	Fig. A	233	175	64.5	8.6
	0.85 kW	GYG851BC2-T2E-B	Fig. A	245.5	187.5	77	9.7
	1.3 kW	GYG132BC2-T2E-B	Fig. B	270.5	212.5	102	12

(Unit: mm)

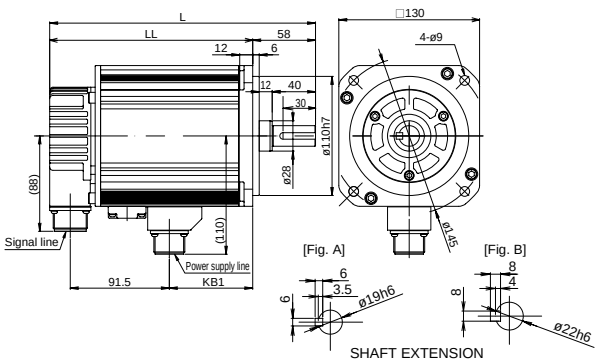

Specifications [Servo Amplifier]

Basic specifications

Applicable motor rated speed			3000 [r/min]					2000 [r/min]					1500 [r/min]		
Applicable motor output			0.05 kW	0.1 kW	0.2 kW	0.4 kW	0.75 kW	0.5 kW	0.75 kW	1 kW	1.5 kW	2 kW	0.5 kW	0.85 kW	1.3 kW
Type RYC□□□		**D3-VVT2**	500	101	201	401	751								
		C3-VVT2						501	751	102	152	202			
		B3-VVT2											501	851	132
Outer frame number			Frame 1				Frame 2	Frame 2			Frame 3		Frame 2		Frame 3
Mass			1.0 [kg]				1.5 [kg]				2.5 [kg]		1.5 [kg]		2.5 [kg]
Power supply	**Main power supply**	**Phase**	Single-phase				Single-phase, 3-phase			3-phase			Single-phase, 3-phase	3-phase	
		Voltage frequency	AC200 to 230 [V] -15 [%] to +10 [%] (-10 [%] to +10 [%] at Single-phase) 50/60 [Hz]												
	Control power supply	**Phase**	Single-phase												
		Voltage frequency	AC200 to 230 [V] -15 [%] to +10 [%] 50/60 [Hz]												
Control system			IGBT PWM sinusoidal PWM drive												
Feedback			17-bit incremental encoder												
Functions, input/output signals	**Sequence input (CONT1 to 5)**		(1) Servo ON, (2) +over-travel, (3) -over-travel, (4) emergency stop, (5) P-action, (6) free run command, (7) anti-resonant frequency selection 1, (8) anti-resonant frequency selection 2, (9) control mode switching, (10) external regenerative resistor overheat, (11) alarm reset These functions can be assigned to sequence inputs CONT1 to CONT5 and used. (*1)												
	Sequence output (OUT1 to 4)		(1) Servo ready, (2) positioning complete, (3) servo alarm detection a-contact, (4) servo alarm detection b-contact, (5) dynamic braking control, (6) over-travel detection, (7) emergency stop detection, (8) deviation zero, (9) speed zero, (10) current limit detection, (11) brake timing These functions can be assigned to sequence outputs OUT1 to OUT4 and used.												
	Encoder signal dividing output	**Dividing setting**	Pulse output setting 16 to 32768 (pulses/rev)												
		Signal form	(1) Line driver output A-phase, B-phase, and Z-phase, (2) open collector output Z-phase												
	Monitor output		Analog voltage output for signal measurement (alternating, pulsating) × 2 (1) Speed command, (2) speed return, (3) torque command, (4) positional deviation, (5) positional deviation expansion, (6) pulse command frequency These functions can be assigned to monitor outputs MON1 and MON2 and used, and the output voltage scale and offset can be set by setting parameters.												
	Position control	**Max. command pulse frequency**	Pulse frequency (max.) command input 1 [MHz] (differential), 200 [kHz] (open collector), dividing output 500 [kHz] (differential)												
		Input pulse signal form	Compatible with two systems: (1) RS-422 line driver signals and (2) open collector signals												
		Input pulse type	Selectable from (1) command pulse/command sign, (2) forward operation/reverse operation pulse, and (3) two 90° phase-different signals												
		Command pulse correction	Position pulse = command pulse × $\frac{\text{command pulse correction } \alpha \text{ (1 to 32767)}}{\text{command pulse correction } \beta \text{ (1 to 32767)}}$ Four types of command pulse correction α can be set, and constant switching operation is available.												
		Position control input	(1) Command pulse correction α selection 1, (2) command pulse correction α selection 2, (3) deviation clear, (4) command pulse disabled These functions can be assigned to sequence inputs CONT1 to CONT5 and used. (*1)												
	Speed control	**Speed control range**	1:5000												
		Acceleration/deceleration time setting	0 to 10 [s]/2000 [r/min], acceleration and deceleration times can be set separately, two acceleration times and deceleration times can be set, S-curve acceleration/deceleration is possible.												
		External speed command input	Speed control by analog voltage commands, ±10 V input, the voltage-speed scale and offset can be set by setting parameters.												
		Internal speed setting	Three speeds can be set by setting internal parameters.												
		Speed control input	(1) Multi-speed selection 1, (2) multi-speed selection 2, (3) forward operation, (4) reverse operation, (5) acceleration/deceleration time selection These functions can be assigned to sequence inputs CONT1 to CONT5 and used. (*1)												
	Torque control	**External torque command input**	Speed control by analog voltage commands, ±10 V input, the voltage-torque scale and offset can be set by setting parameters.												
		Torque control input	(1) Forward operation and (2) reverse operation can be assigned to sequence inputs CONT1 to CONT5 and used. (*1)												
	Regenerative braking		Regenerative braking to DC intermediate circuit, the regenerative resistor can be externally installed.												
	Additional functions		Zero clamp function, vibration suppressing control, notch filter, easy tuning, brake timing output, etc.												
Protection			Overcurrent (OC1, OC2), overspeed (OS), overvoltage (Hv), encoder error (Et), control power error (Ct), memory error (dE), regenerative transistor overheat (rH2), encoder communication error (EC), CONT duplication (Cnt), overload (OL), insufficient voltage (LV), regenerative resistor overheat (rH1), excessive deviation (OF), amplifier overheat (AH)												
Working conditions	**Installation place**		For indoor use at max. altitude of 1,000 m or below. The installation place shall be free from dust, corrosive gas, or direct sunlight. To meet European standards: Pollution degree = 2, overvoltage category = III												
	Temperature/humidity		-10 [°C] to 55 [°C]/10 to 90 [%RH] (without condensation)												
	Vibration/shock resistance		4.9 [m/s²]/19.6 [m/s²]												
Standards			Conforming to UL/cUL (UL508c) and CE Mark (low voltage directive EN50178)												

*1: Functions you want to keep ON at all times can be used without wiring (up to four functions can be set by setting parameters as normally ON signals).

Interface specifications

I/O signal specifications

Terminal name	Code	Specification
Pulse train input	CA, *CA CB, *CB	Pulse train form Selectable from (1) command pulse/command code, (2) forward operation pulse/reverse operation pulse, and (3) two 90° phase-different signals.
	PPI	Drive power supply input during open collector input (+24 V DC)
Frequency dividing output	FFA, *FFA FFB, *FFB	Differential output, two 90° phase-different signal output Set output pulses: 16 to 32768 [pulse/rev]
	FFZ, *FFZ	Differential output 1 [pulse/rev]
	FZ, M5	Open collector output 1 [pulse/rev]
Analog input	Vref	Speed control and torque control analog command input ±10 V (input impedance: 20 kΩ)
Power input for sequence signals	P24 M24	+24 V DC for sequence signals is input from outside. 300 mA power is required as an external power supply.
Sequence input signal	CONT1 to CONT5	Each terminal is ON when connected to M24, and OFF when disconnected. +24 V DC/10 mA (per point). The terminals can be assigned to each function by setting parameters.
Sequence output signal	OUT1 to OUT4	ON while connected to the M24 terminal. 30 V DC/50 mA (max.). The terminals can be assigned to each function by setting parameters.
Monitor output 1, monitor output 2	MON1, MON2	Analog voltage output for signal measurement (alternating, pulsating) Selectable from (1) speed command, (2) speed return, (3) torque command, (4) positional deviation, (5) positional deviation expansion, and (6) pulse command frequency.

Communication specifications

Item	Specification
Interface	Two RS-485 ports
Synchronization system	Start-stop synchronization
Transmission system	Four-wire type duplex
Baud rate	9600, 19200, 38400 [bps]
Max. number of axes	31 axes

Connection Diagram (Reference)

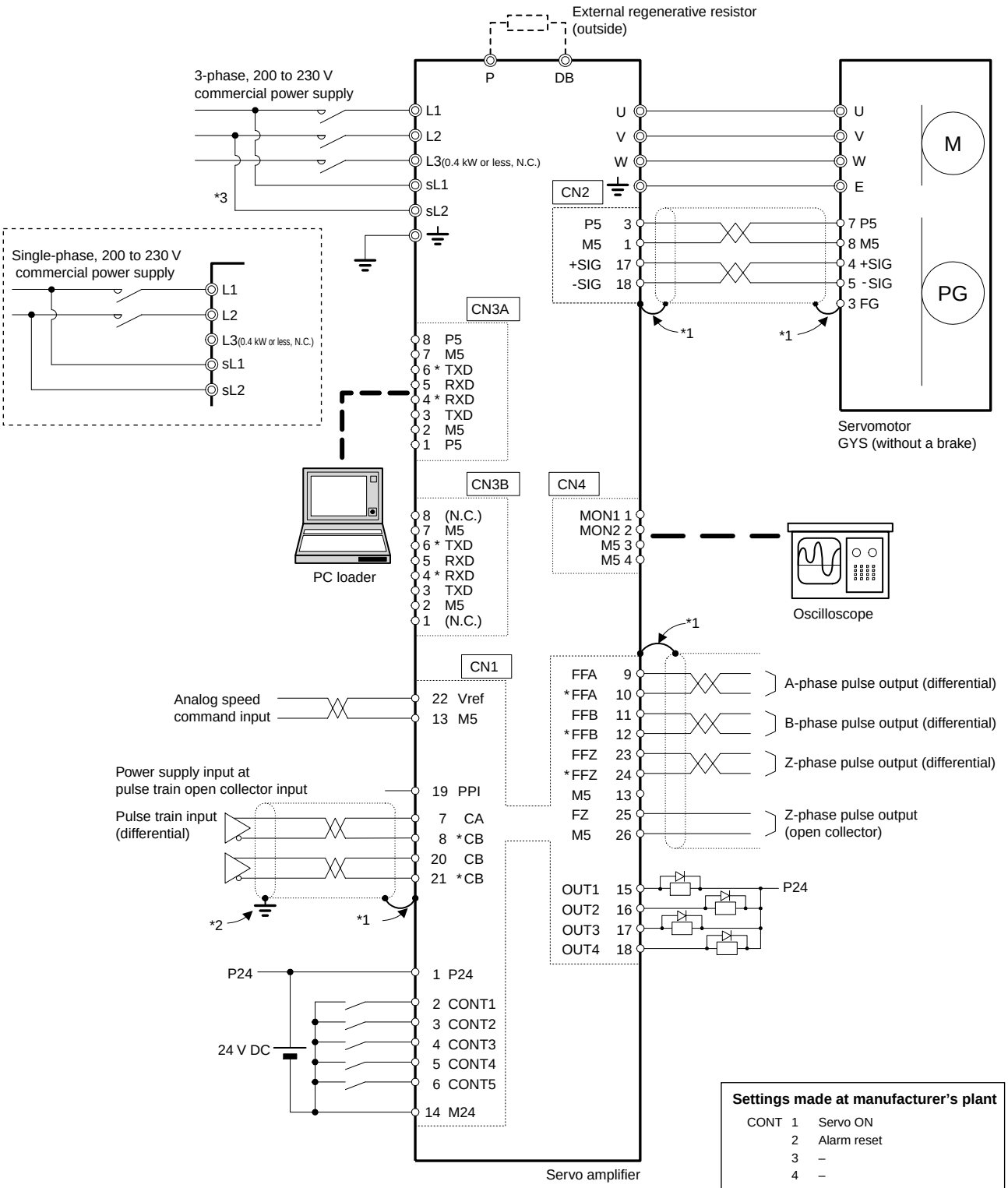

Settings made at manufacturer's plant

CONT	1	Servo ON
	2	Alarm reset
	3	–
	4	–
	5	–
OUT	1	Servo ready
	2	Positioning complete
	3	Servo alarm detection b-contact
	4	–

*1: Connect the shielded lines of CN1 and CN2 to the connector shell. Ground the connector shell.
*2: Ground both ends of each shielded line.
(Connector amplifier side end to the connector shell, and the pulse generator side end to FG (earth).)
*3: Connect the control power supplies (sL1, sL2) as necessary.

CAUTION

The diagram shown above is given as a reference for model selection.
When actually using the selected servo system, make wiring connections according to the connection diagram and instructions described in the user's manual.

External Dimensions [Servo Amplifier]

Frame 1

Rated speed	Applicable motor output	Type
3000 [r/min]	0.05 kW	RYC500D3-VVT2
	0.1 kW	RYC101D3-VVT2
	0.2 kW	RYC201D3-VVT2
	0.4 kW	RYC401D3-VVT2

(Unit: mm)

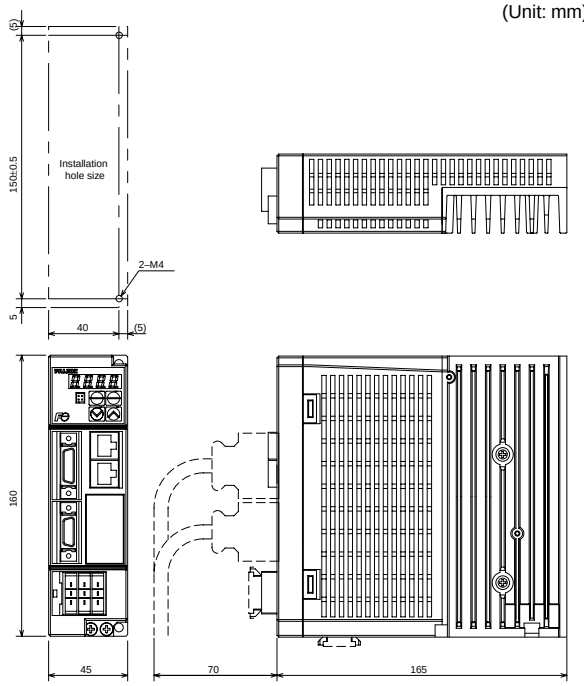

Mass: 1.0 [kg]

Frame 2

Rated speed	Applicable motor output	Type
3000 [r/min]	0.75 kW	RYC751D3-VVT2
2000 [r/min]	0.5 kW	RYC501C3-VVT2
	0.75 kW	RYC751C3-VVT2
	1 kW	RYC102C3-VVT2
1500 [r/min]	0.5 kW	RYC501B3-VVT2
	0.85 kW	RYC851B3-VVT2

(Unit: mm)

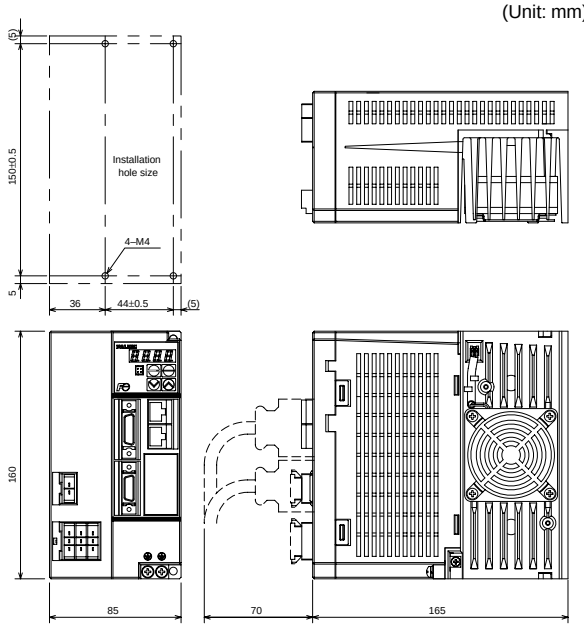

Mass: 1.5 [kg]

Frame 3

Rated speed	Applicable motor output	Type
2000 [r/min]	1.5 kW	RYC152C3-VVT2
	2 kW	RYC202C3-VVT2
1500 [r/min]	1.3 kW	RYC132B3-VVT2

(Unit: mm)

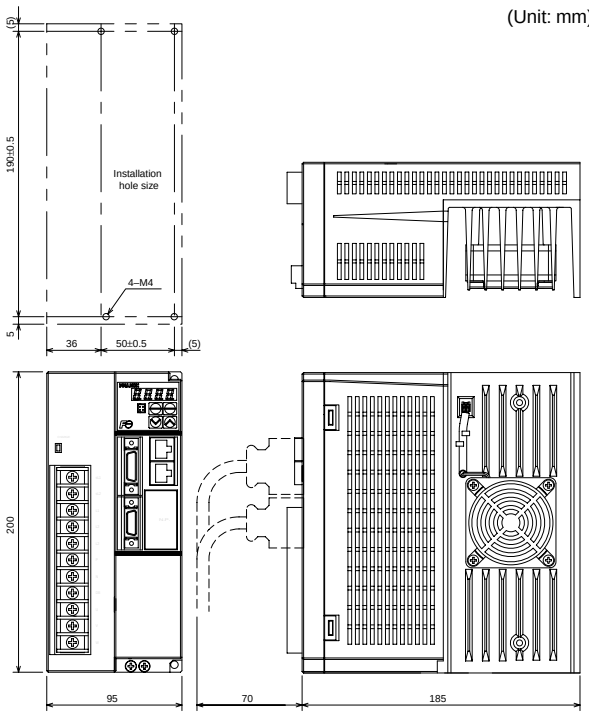

Mass: 2.5 [kg]

Model Code List

Servomotor

Specification						Type
Rated speed	Encoder	Winding insulation class (*1)	Oil seal/shaft	Brake	Rated output	
3000 r/min	17-bit INC	IP67	Without an oil seal, with a key (*2)	Without a brake	0.05 kW	GYS500DC2-T2A
					0.1 kW	GYS101DC2-T2A
					0.2 kW	GYS201DC2-T2A
					0.4 kW	GYS401DC2-T2A
					0.75 kW	GYS751DC2-T2A
				With a brake	0.05 kW	GYS500DC2-T2A-B
					0.1 kW	GYS101DC2-T2A-B
					0.2 kW	GYS201DC2-T2A-B
					0.4 kW	GYS401DC2-T2A-B
					0.75 kW	GYS751DC2-T2A-B
2000 r/min	17-bit INC	IP67	With an oil seal and a key (*3)	Without a brake	0.5 kW	GYG501CC2-T2E
					0.75 kW	GYG751CC2-T2E
					1 kW	GYG102CC2-T2E
					1.5 kW	GYG152CC2-T2E
					2 kW	GYG202CC2-T2E
				With a brake	0.5 kW	GYG501CC2-T2E-B
					0.75 kW	GYG751CC2-T2E-B
					1 kW	GYG102CC2-T2E-B
					1.5 kW	GYG152CC2-T2E-B
					2 kW	GYG202CC2-T2E-B
1500 r/min	17-bit INC	IP67	With an oil seal and a key (*3)	Without a brake	0.5 kW	GYG501BC2-T2E
					0.85 kW	GYG851BC2-T2E
					1.3 kW	GYG132BC2-T2E
				With a brake	0.5 kW	GYG501BC2-T2E-B
					0.85 kW	GYG851BC2-T2E-B
					1.3 kW	GYG132BC2-T2E-B

*1: Excluding the shaft sealing and connectors of the GYS motor, and the shaft sealing of the GYG motor.
*2: Servomotors (1) without an oil seal and a key, (2) with an oil seal and without a key, and (3) with an oil seal and a key are made-to-order.
*3: Servomotors (1) without an oil seal and a key, (2) with an oil seal and without a key, and (3) without an oil seal and with a key are made-to-order.

Servo amplifier

Specification			Type
Input power supply	Applicable motor	Applicable motor output	
Single-phase 200 to 230 V	Low inertia series (GYS motor) 3000 r/min	For 0.05 kW	RYC500D3-VVT2
		For 0.1 kW	RYC101D3-VVT2
		For 0.2 kW	RYC201D3-VVT2
		For 0.4 kW	RYC401D3-VVT2
		For 0.75 kW	RYC751D3-VVT2
Single-phase or 3-phase 200 to 230 V	Middle inertia series (GYG motor) 2000 r/min	For 0.5 kW	RYC501C3-VVT2
		For 0.75 kW	RYC751C3-VVT2
3-phase 200 to 230 V		For 1 kW	RYC102C3-VVT2
		For 1.5 kW	RYC152C3-VVT2
		For 2 kW	RYC202C3-VVT2
Single-phase or 3-phase 200 to 230 V	Middle inertia series (GYG motor) 1500 r/min	For 0.5 kW	RYC501B3-VVT2
3-phase 200 to 230 V		For 0.85 kW	RYC851B3-VVT2
		For 1.3 kW	RYC132B3-VVT2

Model Code List

Options

Cables with connectors

Name	Specification		Applicable model (*1) (A)	(B)	(C)	(D)	(E)	(F)	Type
Cable for sequence input/output (for connection between host controller and amplifier)	3 m	Single-connector	●	●	●	●	●	●	WSC-D26P03
Power cable for power supply wiring	3 m	Single-connector	●	●	●	●			WSC-S03P03-B
Cable for encoder (for connection between amplifier and motor)	5 m	Double-connector	●	●					WSC-P06P05-D
	10 m								WSC-P06P10-D
	20 m								WSC-P06P20-D
	5 m	Double-connector			●	●	●	●	WSC-P06P05-CD
	10 m								WSC-P06P10-CD
	20 m								WSC-P06P20-CD
Power cable for motor (for connection between amplifier and motor)	5 m	Double-connector	●						WSC-M04P05-B
	10 m								WSC-M04P10-B
	20 m								WSC-M04P20-B
	5 m	Double-connector		●					WSC-M06P05-B
	10 m								WSC-M06P10-B
	20 m								WSC-M06P20-B
	5 m	Single-connector			● (*2)	● (*3)			WSC-M04P05-WD
	10 m								WSC-M04P10-WD
	20 m								WSC-M04P20-WD

*1: For applicable models, see Table 1: Applicable models below.
*2: Use the cable together with the connector for motor power supply wiring WSK-M04P-CA.
*3: Use the cable together with the connector for motor power supply wiring WSK-M06P-CA. (The customer is requested to make a cable for brakes.)

Connectors

*When the customer makes a cable, use any of the connectors shown in this table.

Name		Specification	Applicable model (*1) (A)	(B)	(C)	(D)	(E)	(F)	Type
Connector for sequence input/output wiring		Half pitch connector, soldered type, 26-pin × 1 set	●	●	●	●	●	●	WSK-D26P
Connector for power supply wiring		Dynamic connector , X key, 3-pin × 1 set	●	●	●	●			WSK-S03P-B
Connector for encoder wiring	**Amplifier side**	Half pitch connector, soldered type, 20-pin × 1 set	●	●	●	●	●	●	WSK-D20P
	Motor side	MATE-N-LOCK connector, 9-pin × 1 set	●	●					WSK-P09P-D
		Cannon plug (angle), 6-pin × 1 set			●	●	●	●	WSK-P06P-C
Connector for motor power supply wiring	**Amplifier side**	Dynamic connector, Y key, 3-pin × 1 set	●	●	●	●			WSK-M03P-B
	Motor side	MATE-N-LOCK connector, 4-pin × 1 set	●						WSK-M04P
		MATE-N-LOCK connector, 6-pin × 1 set		●					WSK-M06P
		Cannon plug (angle), 4-pin × 1 set			●		●		WSK-M04P-CA
		Cannon plug (angle), 6-pin × 1 set				●		●	WSK-M06P-CA

*1: For applicable models, see Table 1: Applicable models below.

Common options

Name		Specification		Type
Connector for control power supply wiring		Dynamic connector, X key, 2-pin × 1 set		WSK-L02P-D
For personal computer loader connection	**Conversion adapter**	RS-232C–RS-485 conversion	Both a converter and a cable are required.	NW0H-CNV
	Cable	Both-end RJ45 connector, straight connection, 2 m		WSC-PCL
External regenerative resistor		0.4 kW or less	Connector for external regenerative resistor: Use it with WSK-R03P-B.	WSR-401
		0.5 kW to 1 kW		WSR-152
		1.3 kW to 2 kW	–	DB11-2
Connector for external regenerative resistor		Common to applicable models A to D (*1), dynamic connector, 3-pin, X key (with insertion error preventive key) × 1 set		WSK-R03P-B

*1: For applicable models, see Table 1: Applicable models below.

[Table 1: Applicable models]

Motor specification: Rated speed	Brake	Rated output	Motor type	Applicable amplifier type	Applicable model group
3000 r/min	Without a brake	0.05 kW	GYS500DC2-T2A	RYC500D3-VVT2	(A)
		0.1 kW	GYS101DC2-T2A	RYC101D3-VVT2	
		0.2 kW	GYS201DC2-T2A	RYC201D3-VVT2	
		0.4 kW	GYS401DC2-T2A	RYC401D3-VVT2	
		0.75 kW	GYS751DC2-T2A	RYC751D3-VVT2	
	With a brake	0.05 kW	GYS500DC2-T2A-B	RYC500D3-VVT2	(B)
		0.1 kW	GYS101DC2-T2A-B	RYC101D3-VVT2	
		0.2 kW	GYS201DC2-T2A-B	RYC201D3-VVT2	
		0.4 kW	GYS401DC2-T2A-B	RYC401D3-VVT2	
		0.75 kW	GYS751DC2-T2A-B	RYC751D3-VVT2	
2000 r/min	Without a brake	0.5 kW	GYG501CC2-T2E	RYC501C3-VVT2	(C)
		0.75 kW	GYG751CC2-T2E	RYC751C3-VVT2	
		1 kW	GYG102CC2-T2E	RYC102C3-VVT2	
		1.5 kW	GYG152CC2-T2E	RYC152C3-VVT2	(E)
		2 kW	GYG202CC2-T2E	RYC202C3-VVT2	

Motor specification: Rated speed	Brake	Rated output	Motor type	Applicable amplifier type	Applicable model group
2000 r/min	With a brake	0.5 kW	GYG501CC2-T2E-B	RYC501C3-VVT2	(D)
		0.75 kW	GYG751CC2-T2E-B	RYC751C3-VVT2	
		1 kW	GYG102CC2-T2E-B	RYC102C3-VVT2	
		1.5 kW	GYG152CC2-T2E-B	RYC152C3-VVT2	(F)
		2 kW	GYG202CC2-T2E-B	RYC202C3-VVT2	
1500 r/min	Without a brake	0.5 kW	GYG501BC2-T2E	RYC501B3-VVT2	(C)
		0.85 kW	GYG851BC2-T2E	RYC851B3-VVT2	
		1.3 kW	GYG132BC2-T2E	RYC132B3-VVT2	(E)
	With a brake	0.5 kW	GYG501BC2-T2E-B	RYC501B3-VVT2	(D)
		0.85 kW	GYG851BC2-T2E-B	RYC851B3-VVT2	
		1.3 kW	GYG132BC2-T2E-B	RYC132B3-VVT2	(F)

Service Network

Fuji Service Centers

- 〈Overseas Support〉Technical Center
  A/O Service Center
  [Service Area: Asia & Oceania]
  11-2, Osaki 1-Chome, Shinagawa-ku
  Tokyo, 141-0032, JAPAN
  Phone: (03)5435-9058
- U.S.A. Service Center
  [Service Area: North, Central & South America]
  5550 Cerritos Ave. Suite H Cypress, CA. 90630
  U.S.A.
  Phone: (714)220-1879
- CHICAGO Service Station
  4825 N. Scott St. Suite 210, Schiller Park, IL
  60176 U.S.A.
  Phone: (847)233-9844
- EC Service Center
  [Service Area: EC. Middle East & Africa]
  Senefelder Strasse 1,
  63110 Rodgau, F.R.GERMANY
  Phone: (06106)285-7890
- South East Asia Service Center
  [Service Area: South East Asia]
  Block 5000 Ang Mo kio Ave 5 #02-03 Techplace II
  SINGAPORE 569870
  Phone: (6481)5079

Contracted Service Companies

- **North. Central & South America Area**
  U.S.A.
  OESS CORPORATION(Head Office:NEW JERSEY)

❶ NEW JERSEY
800 Huyler Street Teterboro, NJ 07608, U.S.A.
Phone: (201)288-4422

❷ CHICAGO
4825 N Scott Suite 210 Schiller park, IL 60176, U.S.A.
Phone: (847)233-9412

❸ LOS ANGELES
5550 Cerritos Ave. Suite H, Cypress, CA 90630
U.S.A.
Phone: (714)220-1879

❹ SAN JOSE
1440, Koll Circle, Suite 107, San Jose, CA 95112
U.S.A.
Phone: (408)437-1582

❺ PORTLAND
7921 SW Cirrus Drive, Beaverton, OR 97008,
U.S.A.
Phone: (503)520-5044

- **Asia & Oceania Area**

❻ KOREA
DONGHAI CORPORATION
Donghai Building 1056-28 Namhyum-Dong
Kwanak-Ku Seoul, R.O.KOREA
Phone: (02)586-0058

❻ KOREA
GAIUS INDUSTRIES CO., LTD.
Cana Bldg., 10-59, Yangjae-Dong, Seocho-Gu,
Seoul, 137-887, R.O. KOREA
Phone: (02)3463-0766

❼ TAIWAN
TAIWAN OPTICAL MEASURING INSTRUMENT CO., LTD.
6F-3, No.190. Sec. 2, Chung Hsing Rd Hsin Tien
City, Taipei Hsien, TAIWAN R.O.C.
Phone: (02)29118420

❽ HONG KONG
FUJI ELECTRIC(ASIA) CO., LTD.
Room 1001, 10/F., Tsimshatsui Center 66 Mody
Road, Tsimshatsui East Kowloon, HONG KONG
Phone: 2311-8282

❾ CHINA
FUJI-ELECTRIC TECHNOLOGY AND SERVICE
(SHENZEN) CO., LTD.
Room 209 Liming Building No.144, Zhongxing Rd.
Luohu Ku. Shenzhen City, CHINA
Phone: (0755)8220-2745

❿ AUSTRALIA
CNC and ROBOTIC AUTOMATED SERVICES
Unit 33/16 Macquarie Place Boronia Victoria 3155,
AUSTRALIA
Phone: (03)9483-8629

⓫ INDIA
AUTONUM CONTROLS PVT LTD.
109, Sagar Building, Prabhat Industrial Estate,
W.E. Highway, Befor Check Naka, Dahisar-East,
Mumbai 400 068 INDIA
Phone: (022)28960027

- **EC. Middle East & Africa Area**

⓬ F.R.GERMANY
OESS GmbH.
Senefelder Strasse 1, 63110 Rodgau,
F.R.GERMANY
Phone: (06106)285-7890

- **South East Asia Area**

⓭ SINGAPORE
Fuji Technical Center (S'pore) Pte Ltd.
Block 5000 Ang Mo kio Ave 5 #02-03 Techplace II
SINGAPORE 569870
Phone: (6481)5079

SAFETY PRECAUTIONS

1. This catalog is intended for use in selecting required servo systems. Before actually using these products, carefully read their instruction manuals and understand their correct usage.
2. Products described in this catalog are neither designed nor manufactured for combined use with a system or equipment that will affect human lives.
   If you are considering using these products for special purposes, such as atomic energy control, aerospace, medical application, or traffic control, please consult our sales office.
3. If you use our product with equipment that is expected to cause serious injury or damage to your property in case of failure, be sure to take appropriate safety measures for the equipment.

Inverter Value Engineering Center/Suzuka Factory has acquired the certification of environment management ISO14001 and quality management system ISO9001.

Fuji Electric FA Components & Systems Co., Ltd.

Gate City Ohsaki, East Tower, 11-2, Osaki 1-chome
Shinagawa-ku, Tokyo 141-0032, Japan
Phone: +81-3-5435-7139 Fax: +81-3-5435-7458

Printed on 100% recycled paper

Information in this catalog is subject to change without notice.

Printed in Japan 2004-3 (C04a/C04a) 30CM